





Intertek

Conforme ADA
ADA Compliant

AKK-iQ4-10

Smart Toilet iQ4-10

Features

A new generation of smart toilets, featuring unique technology, is now at your fingertips.

- Three modes for opening and closing the lid and seat, with automatic flushing
- Adjustable (4 levels): heated seat, instant hot water, and air-pulse drying
- Stainless steel nozzle for front and rear wash, with self-cleaning function
- Advanced features: LCD display, multifunction remote control, UV sterilization, aromatherapy, deodorization, and nightlight
- Safety & convenience: child seat, multi-level protection, emergency battery, and integrated water filtration system
- 3-Year Limited Warranty

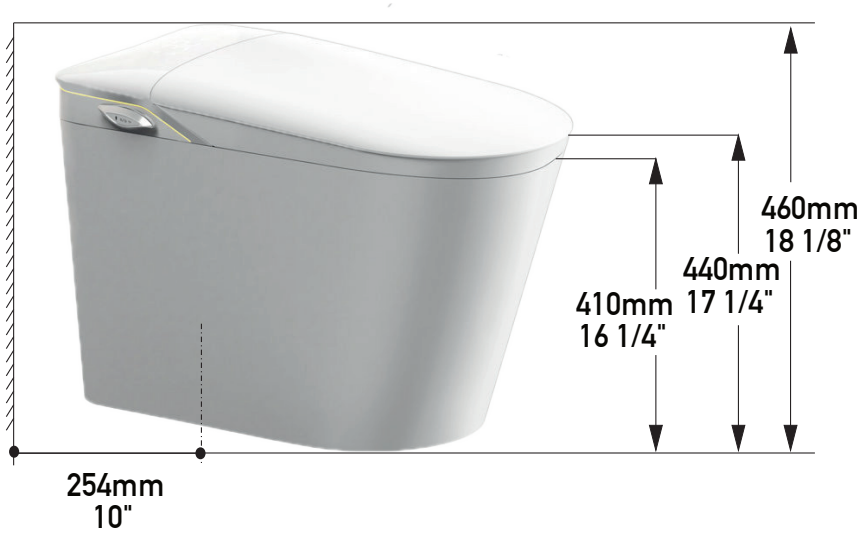



Adult seat measurements

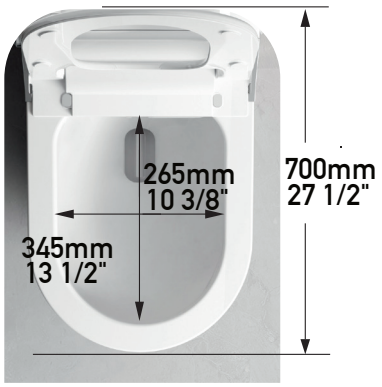

Internal bowl measurements

Dimensions

Width
410mm / 16 1/8''

Depth
700mm / 27 1/2''

Height
460mm / 18 1/8''

Seat height
419mm / 16 1/2''

AKTUELL.CA

Pictures, illustrations and measures are made available only for information purpose. The manufacturer can not be held responsible for changes.