

Smart Toilet iQ5

Discover the ultimate smart toilet!





Features

- Voice-controlled toilet (English only)
- Built-in water tank with booster pump and dual-jet flushing system.
- Three lid and seat opening and closing modes, including a foot-activated push button.
- Four adjustable settings for the heated seat, instant warm water and warm air drying.
- Stainless steel nozzle for front and rear washing, with self-cleaning function.
- Advanced features: LCD display, multifunction remote control, UV sterilization, aromatherapy and activated carbon filter for odor control.
- Safety and convenience: child seat, multi-level safety protection, emergency backup battery and built-in water filtration system.
- Customizable night light or ambient lighting.
- Mobile app control.
- 3-Year Limited Warranty.



Side View



Front View

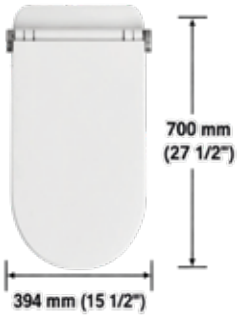

Top View



Adult seat measurements

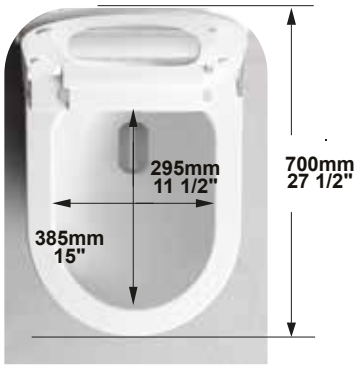

Internal bowl measurements

AKK-iQ4-10

Dimensions

Width
435mm / 17 1/8''

Depth
700mm / 27 1/2''

Height
485mm / 19''

Seat height
432mm / 17''

AKTUELL.CA

Pictures, illustrations and measures are made available only for information purpose. The manufacturer can not be held responsible for changes.